LumiOS® RUBIK series

Ultra-Lightweight
Flexible Configuration
Fine Pitch Quality
Close Viewing
Easy Installation









Next-Generation Indoor Display

Flexible layout indoor cabinet for rapid-deployable creative installations.

Smooth Motion • Flat • Corner • Column • Cube • Wide Viewing

RELIABLE PRECISION ENGINEERING

ONE-CABINET VERSATILITY

NEW 5KG LIGHTWEIGHT DESIGN

FRONT & REAR MAINTENANCE

Lightweight Design. Limitless Possibilites. Exceptional Performance.

The RUBIK Series LED Display by LumiOS combines innovative engineering, ultra-slim construction, and stunning high-resolution image quality in one versatile indoor display solution. Designed to adapt to virtually any professional environment, RUBIK delivers vibrant, true-to-life visuals with an expansive color gamut and exceptional clarity.

With pixel pitches available as fine as 1.5 mm, RUBIK delivers exceptional image detail and clarity for applications where visual precision matters. Its high refresh rate supports smooth, flicker-free performance for camera capture and video production, making it an excellent choice for studios, broadcast environments, and other content-driven applications.

PRODUCT ADVANTAGES



GOB Technology

Features Glue-on-Board (GOB) LED Technology for advanced protection and easy maintenance.

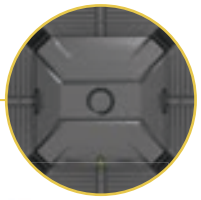

3-In-1 Power Module

Receiving card, HUB card, and power supply are integrated in one unit, providing fast and easy detachment or installation.

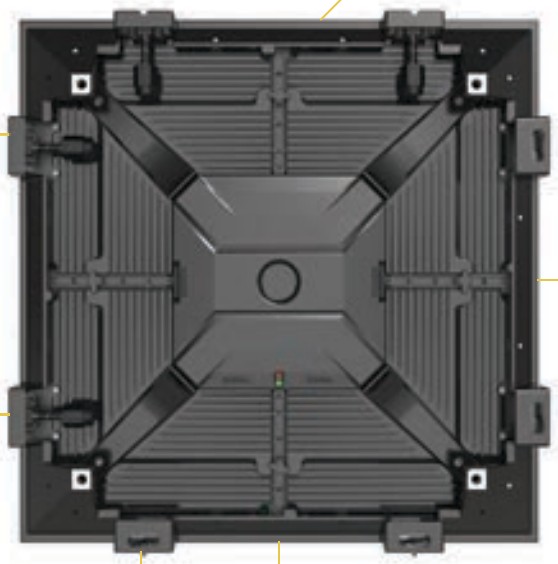

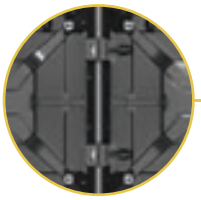

Precise Module Alignment

Unique mating design for exceptional precision and seamless splicing.



Die-Cast Hub Cover

Made from high-strength die-cast aluminum, providing excellent durability, heat dissipation, and protection for internal components ensuring stable performance during long-term operation.



Cabinet Geometry

New cabinet design supports construction of Flat, Corner, Column, and Cubic displays.



Front & Rear Service

Supports both front and rear access, making installation, inspection, and maintenance more flexible and efficient.

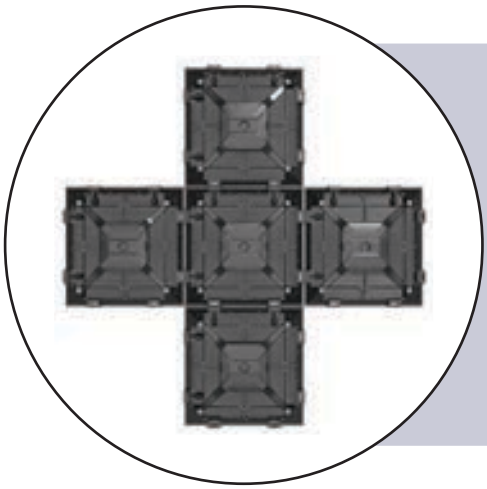

One Cabinet. Endless Configurations.

Engineered for versatility and efficiency, a focus on optimizing lightweight construction reduced cabinet weight significantly. The result is **an impressive 30% weight difference** when compared with its predecessor, helping to minimize structural load requirements for larger installation projects.

Also, RUBIK eliminates the need for specialized cabinets when creating corner displays and complex configurations. Its modular design simplifies procurement planning, streamlines installation, and provides greater freedom to bring unique display concepts to life.

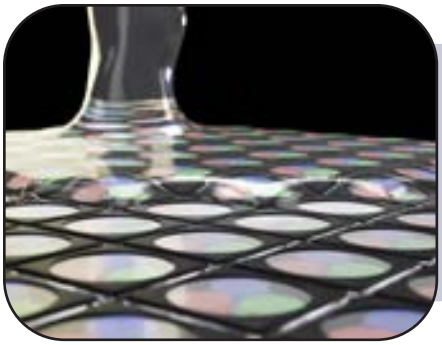

Advanced GOB Technology

Built for demanding visual environments, RUBIK incorporates Glue-on-Board (GOB) LED technology, featuring a transparent protective resin layer applied over the LEDs. This added protection helps safeguard the display against impacts, moisture, and dust while supporting reliable performance in high-traffic environments.

Water-Resistant • Anti-Glare • Enhanced Protection • Easy Maintenance

KEY BENEFITS

Enhanced durability: Added protection against everyday impacts and environmental exposure.
Moisture resistance: A protective surface designed to help prevent moisture-related damage.
Reduced reflection: Anti-glare properties for a clearer image that supports comfortable viewing.
Reliable image quality: A seamless surface that helps avoid traditional mask deformation issues.
Easy maintenance: The smooth, waterproof surface can be wiped clean directly, simplifying routine care.



Hanging Installation



Wall Mount Installation



Creative Wall Mount



Floor-Standing Displays





360° Viewing



Column Wraps

	RUBIK 1.5	RUBIK 1.9	RUBIK 2.6	RUBIK 3.9
Pixel Pitch	1.5mm	1.9mm	2.6mm	3.9mm
LED Type	SMD1010/1515	SMD1010/1515	SMD1515	SMD2020
LED Mask	GOB			
Pixel Configuration	1R1G1B			
Size of Module	250 x 250mm			
Resolution of Module	160 x 160 px	128 x 128 px	96 x 96 px	64 x 64 px
Density (dots/m²)	409,600	262,144	147,456	65,536
Size of Cabinet (HxWxD)	500mm x 500 x 64mm			
Cabinet Resolution	320 x 320 px	256 x 256 px	192 x 192 px	128 x 128 px
Cabinet Material	Die Cast Aluminum			
Weight of Cabinet	5 kg (11 lbs)			
Installation	Wallmount, Hanging Bar, or Groundstack			
Maintenance	Front & Rear Service			
Cabinet Angles	0° (Flat) or 90° (Corner)			
Viewing Angle	160°			
Operating Temperature	-10°C to +45°C			
IP Rating	IP30 Indoor			
Max Consumption	450 W/m²			
Avg Consumption	150 W/m²			
Gray Scale	14 -16-Bits			
Color Temperature	3000-10000K			
Driving Method	1/128	1/64	1/32	1/16
Refresh Frequency	≥3840 Hz			
Brightness	800 cd/m²			
Brightness Control	256 Grade			
Certifications	CE, FCC, cETLus			

Dimensions:

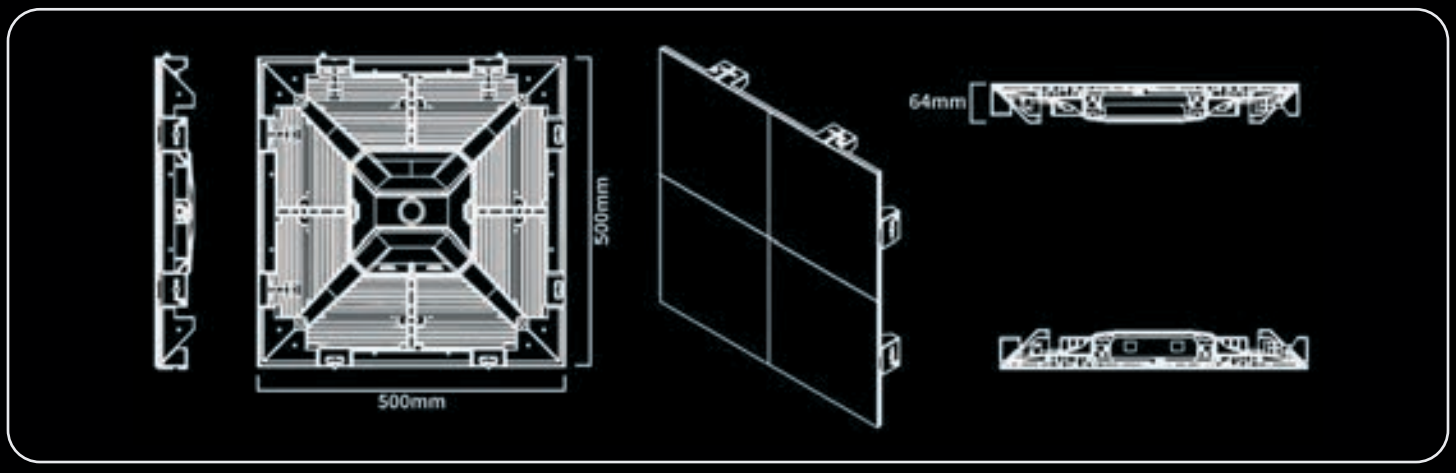

LUMIOS LED VIDEO WALL

Designed & Engineered in